TEMPERATURE COMPENSATED PRESSURE REGULATORS TYPE A4AT, A4AOT

Port Size 3/4" - 4" (20 - 100 mm)
For Ammonia, R22, R134a, R404a R507
Other Refrigerants and Oils

FEATURES

- Pilot operated characterized Modulating Plug for precise control
- Suitable for all common refrigerants and mineral oil
- 400 psig (27.6 bar) Desisgn pressure (MRP)
- Flanges for threaded or welded steel pipe and copper tube (copper not for ammonia)
- Unique Modular construction
- Interchangeable parts
- Easy to Service
- Close coupled strainers, optional
- Many control variations are possible with the use of a few Modules and kits
- Stainless Steel Diaphragm
- Manual Opening Stem

BULLETIN 23-09

A4AT

A4AOT

March 2002
Installation, Service and Parts Information

Description:

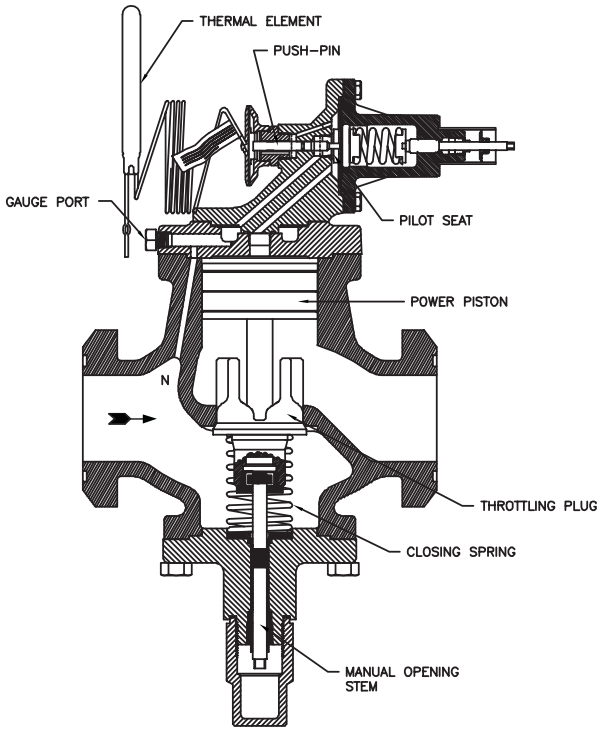

Fig. 1

These compact, heavy duty, pilot operated iron alloy (ASTM A126 Class B high strength semi-steel) Regulators are suitable for Ammonia, R22, R134a, R404a, R707 and other common refrigerants and fluids approved for use in refrigeration systems.

Standard Temperature Range is -20°F to 80°F (-30°C to +30°C). Also available: 60°F to 140°F (20°C to 60°C). Maximum temperature to which thermal bulb can be exposed is 105°F (65°C).

These valves are generally ordered with close coupled upstream strainer to prevent entrance of foreign material into the valve and the rest of the system.

PURPOSE

The temperature compensated pressure regulator differs from the conventional pressure regulator in that rather than maintaining a previously set constant pressure, this regulator modulates pressure in accordance with the demands of the load. The

regulator will vary its pressure set point as load demand varies as sensed by the thermal bulb.

A4AT DIRECT ACTING TEMPERATURE REGULATOR

The A4AT Regulator modulates flow in response to the temperature variation sensed by its thermal bulb. A special temperature pilot replaces the standard A4A pressure pilot. A rise in temperature will cause the valve to open; a drop will cause it to close. This valve responds only to temperature changes and is not a pressure regulator.

Operation

Temperature changes of the cooled medium are sensed by the thermal bulb of the pilot. As the bulb is warmed the charge in the thermal element expands, creating an increase in pressure on the element diaphragm. The resulting force pushes a push pin against the pilot diaphragm, lifting it off the seat, allowing inlet pressure to reach the top of the piston of the main regulator, causing the main valve to open. A drop in the temperature at the thermal bulb causes the opposite to happen, closing the main valve.

Adjustment

In addition to the pressure gauge at the inlet, a thermometer is needed in the cooled medium. Set the regulator pilot to the desired temperature by turning the adjusting stem. The temperature scale is only approximate and minor adjustments will be necessary after the system has been in operation for a while to obtain the desired temperature setting.

A4AOT REVERSE ACTING TEMPERATURE REGULATOR

The A4AOT Regulator modulates flow in response to the temperature variations sensed by its thermal bulb. A special temperature pilot replaces the standard A4AO pilot. A drop in temperature will cause the valve to open; a rise will cause it to close. This valve responds only to temperature changes and is not a pressure regulator.

Operation

Temperature change of the controlled medium is sensed by the thermal bulb of the pilot. As the bulb is warmed, the charge in the thermal element expands. The resulting force is transmitted to the pilot plug by a push rod, causing the pilot to close. This in turn causes the main valve to close. A drop in the temperature at the thermal bulb causes the opposite to happen, thus allowing the main valve to open. Standard range is -20ºF to 80ºF (-30ºC to +30ºC). Also available 60ºF to 140ºF (20ºC to 60ºC). Maximum temperature to which thermal bulb can be exposed is 150ºF (65ºC).

The A4AOTS Regulator combines the Reverse Acting Temperature Regulator with Electric Shut-Off. It operates the same as the A4AOT when the solenoid pilot is energized and closes when the solenoid pilot is de-energized regardless of the temperature setting or pressure in the regulator.

Manual Opening Stem

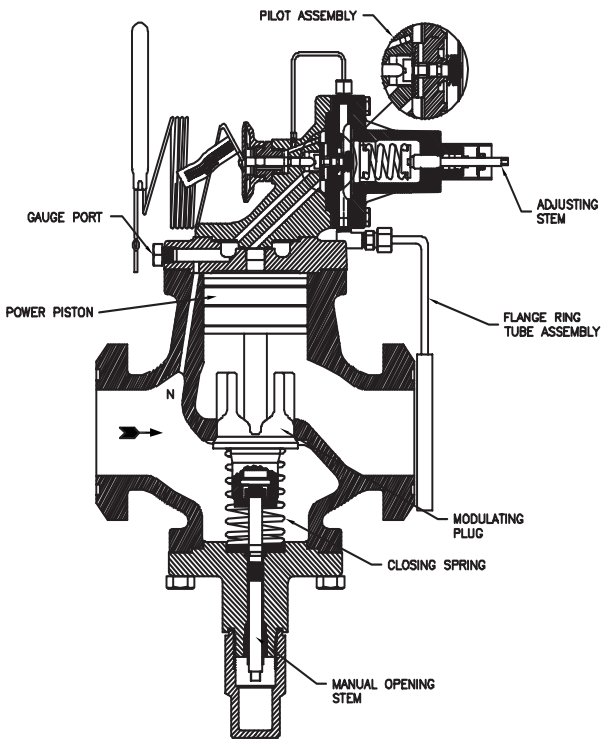

Fig. 2

All Type A4 Regulators are provided with a manual opening stem. To open the regulator manually, back the stem out (turn counter-clockwise) until it stops. To put the regulator into automatic operation, turn the stem in (clockwise) until only the flats on the stem protrude from the packing nut.

Installation

All regulators are packed for maximum protection. Unpack carefully, check the carton to make sure all flanges and other items are unpacked. Save the enclosed instructions for the installer and eventual user.

Do not remove the protective coverings from the inlet and outlet of the regulator until the regulator is ready to be installed. Protect the inside of the regulator from moisture, dirt and chips before and during installation. When welded or brazed flange connections are used, all slag, scale and loose particles should be removed from the flange interior before the regulator is installed between the flanges. It is advisable to install a close-coupled companion strainer (RSF) at the inlet of the regulator to help protect it from any foreign material in the system.

The A4A series of regulators will give optimum performance if mounted in a horizontal line in a vertical position with the manual opening stem on bottom. Where other positions are desired, the factory should be consulted: please give application and piping details. The regulator must be installed with the arrow on the valve body pointing in the direction of the fluid flow for the regulator to function properly. Backward flow through the regulator is uncontrolled and will vary with valve model and the reverse pressure drop encountered. The regulator is not a check valve.

Tighten the flange bolts and nuts evenly to provide proper seating of the flange gasket and to avoid damage to gaskets or flanges. (See Bolt Torque Table). Avoid using the regulator flange bolts to stretch or align pipe. Even the heavy duty body of an A4A can be distorted, causing the precision parts to bind.

The regulator should be installed in a location where it is easily accessible for adjustment and maintenance. The location should be such that the regulator can not be easily damaged by material handling equipment. When it is necessary to insulate the regulator (and companion strainer), the insulation should be installed to provide access to the regulator (and companion strainer) for adjustment and maintenance. Do not insulate the solenoid coil and coil housing. Proper indicating gauges should be installed to be easily visible to the operating engineer for system checking and adjusting purposes.

Care should be exercised when locating the temperature bulb and capillary tube to prevent damage to either part. The selection of the bulb location is important. It should follow generally accepted practices. On installations where the bulb is strapped to the line, the location of the bulb is at 12 o'clock for lines 1" outside diameter and smaller and 4 or 8 o'clock on larger lines. The lines must be clean to assure good contact between bulb and line. On steel lines, it is recommended that some type of rust preventative method be used to minimize future corrosion. Finally, the bulb should be insulated to eliminate the effects of ambient air temperatures. If more sensitivity is desired, a bulb well is recommended. Do not locate the bulb in or near a trap in the line. Liquid refrigerant may accumulate at this point and feed an erroneous signal to the temperature bulb, causing erratic operation of the temperature regulator.

Disassembly and Assembly

Before disassembling any A4A type regulator, read the information in this bulletin and Bulletin RSB, Safety Procedures for Refrigerating Specialties Division Refrigeration Control Valves.

Before a regulator is removed from the line or disassembled in the line, make sure that all refrigerant has been removed from the regulator, including the bonnet, where applicable, and the close-coupled strainer. The regulator must be isolated from the rest of the system in a safe manner. When pumping down to remove the refrigerant, the manual opening stem 33A must be turned out (counter clockwise) to make sure the valve is open.

Disassembly - Back out the adjusting stem 6 to

A4AT PARTS KITS REFERENCE

		PORT SIZE							
ITEM	DESCRIPTION	3/4"	1"	1-1/4"	1-5/8"	2"	2-1/2"	3"	4"
4 -6	Stem Kit	202121	202121	202121	202121	202121	202121	202121	202121
12 -14, 16	Spring Kit RA / V	202481	202481	202481	202481	202481	202481	202481	202481
	Spring Kit RD	202482	202482	202482	202482	202482	202482	202482	202482
16, 17, 97	Diaphragm Kit	200775	200775	200775	200775	200775	200775	200775	200775
17	Plug Pkg, Pipe	202552	202552	202552	202552	202552	202552	202552	202552
19, 28, 29	Adapter Kit	200703	200703	200700	200725	200725	200685	200713	200716
29, 30	Piston Kit	200760	200760	200767	200389	200389	200391	200393	200227
34-37	Spring Kit, Closing	202300	202300	202301	202302	202302	202303	202304	202305
33-37, 40-42	Plug Kit, Full Capacity	202021	202022	202023	202024	202025	202026	202027	202028
	Plug Kit, 50% Capacity	202029	*	NA	NA	NA	NA	NA	NA
	Plug Kit, 35% Capacity	NA	NA	202031	202032	**	202033	202034	202035
	Plug Kit, 17% Capacity	202030	*	NA	NA	NA	NA	NA	NA
37, 38, 40, 41	Bottom Cover Kit	200761	200761	200761	NA	NA	NA	NA	NA
40-42	Packing Kit, Stem	202100	202100	202100	202100	202100	202100	202101	202101
43, 44	Seal Cap Kit	202110	202110	202110	202110	202110	202110	202111	202111
33-38, 40-44	Bottom Kit, Full Capacity	202010	202011	202012	202013	202014	202015	202016	202017
	Bottom Kit, 50% Cap	202347	*	NA	NA	NA	NA	NA	NA
	Bottom Kit, 17% Cap	202346	*	NA	NA	NA	NA	NA	NA
31 (Qty 8)	Bolt Pkg, Adapter	202248	202248	202248	202249	202249	202249	202250	202250
39 (Qty 6)	Bolt Pkg, Bottom Cap	NA	NA	NA	202251	202251	202251	202252	202252
99 (Qty 5)	O-Ring Pkg, Adapter	202485	202485	202485	202485	202485	202485	202485	202485
102 (Qty 5)	O-Ring Pkg	202488	202488	202488	202488	202488	202488	202488	202488
103 - 106	Thermal Element	202088	202088	202088	202088	202088	202088	202088	202088
91 -106, 3 -17	Bon/Adapt Low Temp	200622	200622	200622	200622	200622	200624	200624	200624
	Bon/Adapt Hi-Temp	202098	202098	202098	202098	202098	202097	202097	202097

A4AT

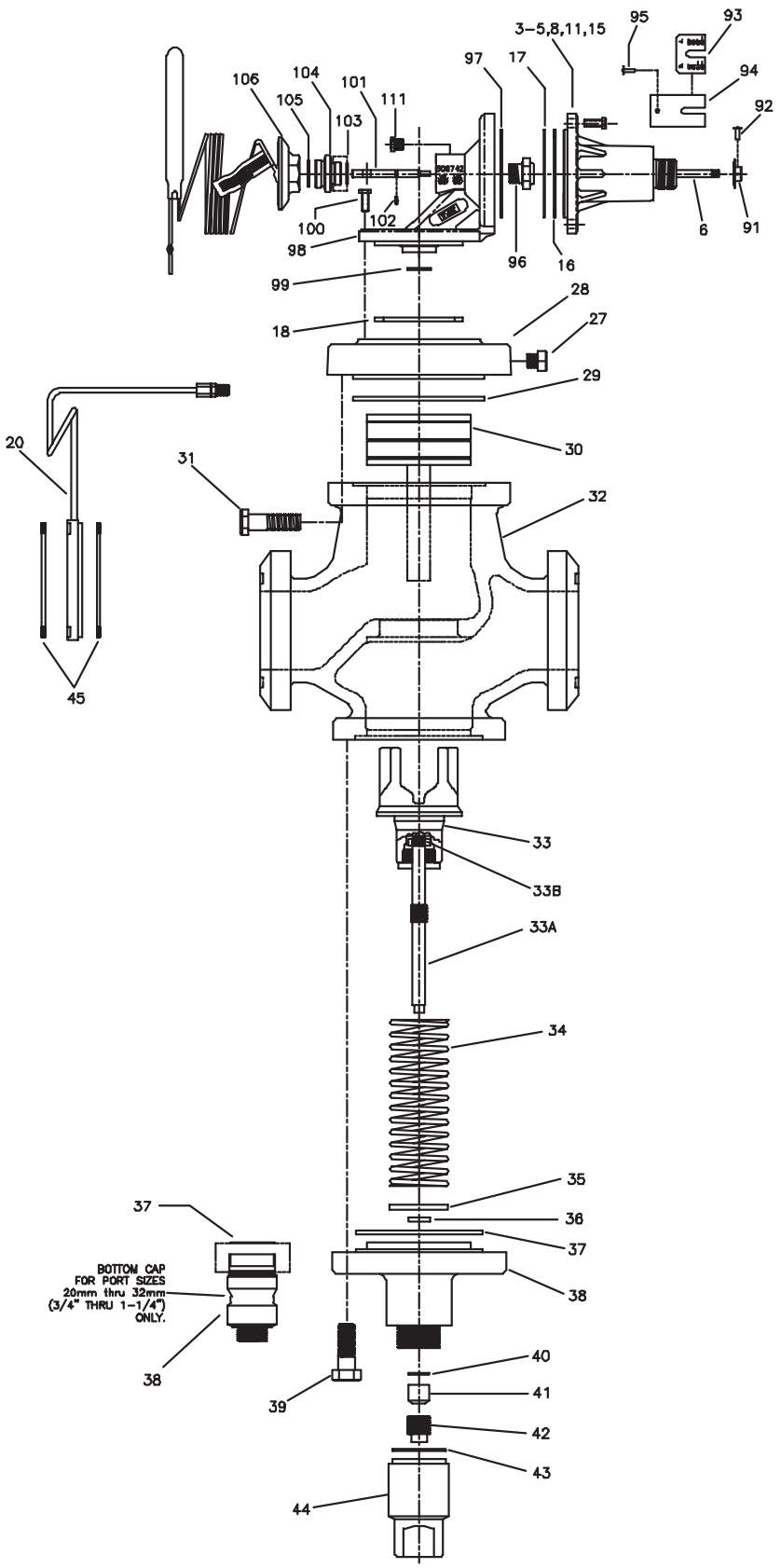

Fig. 3

3	Nut, Stuffing Box
4	Packing Ring
5	Packing Washer
6	Adjusting Stem
11	Screw, Bonnet
15	Diaphragm Follower
16	Gasket, Bonnet
17	Diaphragm
19	Gasket, Adapter
27	Gauge Port Pipe Plug
28	Adapter, Body
29	Gasket, Body
30	Piston-Stem
31	Screw, Body
32	Body
33	Throttling Plug Asm
34	Spring, Closing
35	Dirt Wiper Retainer
36	Dirt Wiper
37	Seal, Bottom Cap
38	Bottom Cap
39	Screw, Bottom Cap
40	Packing Washer
41	Packing Ring
42	Stuffing Box Nut
43	Gasket, Seal Cap
44	Seal Cap
45	Gasket, Flange
46	Bolt, Flange
47	Nut, Flange
91	Indicator Ring
92	Indicator Screw
93	Indicator Tag
94	Indicator Tag
95	Collar Screw
96	Pilot Seat
97	Gasket
98	Pilot Body
99	O-Ring
100	Cap Screw
101	Push Pin
102	O-Ring
103	O-Ring
104	Thermo-Adapter
105	O-Ring
106	Thermal Element
111	Pipe Plug

remove all tension from the Range Spring 13. This is necessary to avoid possible damage to internal parts of the regulator. Remove Bonnet Screws and disassemble parts. Normally parts 8 through 15 do not require disassembly. Inspect parts for dirt, corrosion and wear and clean and replace as needed. Inspect Pilot Seat 96 (A4AT) top seating surface for dirt, wear or damage. Remove from valve body and clean, lap on a flat plate or replace as necessary. Examine the diaphragm region which contacts the seat surface; look for dirt heavy scratches or corrosion. If the diaphragm cannot be easily wiped clean, it should be replaced. Check the movement of the push pin 101. If it does not move smoothly, the thermal element should be removed and the push pin, adapter, o-ring, and pilot body cleaned thoroughly. Remove Adapter 28 by removing Cap Screws 31. Turn the Manual Opening Stem 33A all the way in until the flats on the stem barely protrude from the stuffing box nut. Push Piston 30 down against the spring force. The piston should move freely down and be returned by the spring force. If the piston is jammed or sticky, remove Bottom Cap Assembly, which includes Items 33 through 42, by removing Cap Screws 39 or unscrewing Bottom Cap, 3/4" through 1-1/4" (20mm through 32mm). Using a hard wood dowel rod inserted through the bottom of the valve, tap the piston upward and out. Thoroughly clean all parts. If jamming has taken place and the piston and bore are scored, remove all burrs by polishing the piston, bore and modulating plug with fine crocus cloth. Inspect the seating area of the Modulating Plug 33 for damage or erosion. If damaged it should be replaced. It would be advisable to replace the entire bottom cap assembly. Inspect all gaskets and “o” rings for damage and replace where necessary.

Assembly - When reassembling the valve, all internal parts should be clean, dry and lightly oiled with refrigerant oil, except “o” rings. Apply silicone grease to the “o” rings. Care must be taken especially when the parts are cold since moisture can condense on parts and cause rapid rusting. When replacing gaskets, they should be oiled very lightly with refrigerant oil before assembly. Items which require several bolts to fasten must be tightened uniformly to provide proper alignment and seating. (See Bolt Torque Table). Install bottom cap assembly first and tighten in place. Carefully replace the piston; never try to force it in place. Align the Adapter Gasket 29 carefully with the proper holes in the adapter and the valve body and fasten adapter in place. Before assembling the bonnet be sure the adjusting Stem 6 is turned all the way out. Place Gasket 97, Diaphragm 17 and Gasket 16 in Pilot Body 98. The raised center of the diaphragm must be towards the bonnet. Stack Diaphragm Follower 15, Lower Spring Rest 14, Spring 13 and Upper Spring Rest 12 on top of diaphragm and carefully lower bonnet in place and tighten Screws 11 in place. Make sure two diaphragms are used for Range +60°F to 140°F (20°C to 60°C). Tighten Cap Screws 11 evenly. The ideal tightening torque is 11 ft. lbs. (1.5 kg-m). Valve is now ready to be adjusted for normal operation.

If close coupled strainer is used, it may be cleaned before putting the valve back in operation. The regulator must be tested for leaks with refrigerant gas or other appropriate gas before the system is put into operation.

Maintenance and Service
General Procedure:
Dirt in the system is the greatest single cause of regulator malfunction. All screens or filters must be cleaned or replaced when they become dirty. At start up it is especially important that these items are cleaned or changed frequently. When the RSF close-coupled companion strainers are used, maintain according to instruction in Bulletin 00-10. Moisture in halocarbon systems in particular can cause corrosion or form ice, causing the piston to freeze in position. Filter-driers should be used and maintained for halocarbon systems.

Before deciding to disassemble a regulator for

servicing, the following investigations should be made:
Check the manual opening stem; it should be turned in for automatic operation.

Check the regulator setting to make sure it is properly adjusted. Turn adjusting screw slowly to see if regulator responds. Check regulator pressure range; if wrong, range spring must be replaced.

Check other system components for proper operation.

Check hand valves in the system to make sure they are open or closed as required and the system is receiving liquid or gas as the case may be.

Before disassembly of regulator, make certain that all refrigerant has been removed (pumped out) from the regulator and it companion strainer where one is used. Read Safety Bulletin RSB.

Safe Operation (See also Bulletin RSBCV)
People doing any work on a refrigeration system must be qualified and completely familiar with the system and the Refrigerating Specialties Division valves involved, or all other precautions will be meaningless. This includes reading and understanding pertinent Refrigerating Specialties Division product Bulletins and Safety Bulletin RSB prior to installation or servicing work.

Where cold refrigerant liquid lines are used, it is necessary that certain precautions be taken to avoid damage which could result from liquid expansion. Temperature increase in a piping section full of solid liquid will cause high pressure due to the expanding liquid which can possibly rupture a gasket, pipe or valve. All hand valves isolating such sections should be marked, warning against accidental closing, and must not be closed until the liquid is removed. Check valves must never be installed upstream of solenoid valves, or regulators with electric shut-off, nor should hand valve upstream of solenoid valves or downstream of check valves be close until the liquid has been removed. It is advisable to properly install relief devices in any section where liquid expansion could take place.

Avoid all piping or control arrangements which might produce thermal or pressure shock.

For the protection of people and products, all refrigerant must be removed from the section to be worked on before a valve, strainer, or other device is opened or removed.

Flanges with ODS connections are not suitable for ammonia service.

Warranty
All Refrigerating Specialties products are warranted against defects in workmanship and materials for a period of one year from date of shipment from originating factory. This warranty is in force only when products are properly installed, field assembled, maintained, and operated in use and service as specifically stated in Refrigerating Specialties Catalogs or Bulletins for normal refrigeration applications, unless otherwise approved in writing by Refrigerating Specialties Company. Defective products, or parts thereof returned to the factory with transportation charges prepaid and found to be defective by factory inspection will be replaced or repaired at Refrigerating Specialties option, free of charge F.O.B. factory. Warranty does not cover products which have been altered, or repaired in the field; damaged in transit, accidents, misuse, or abuse. Products disabled by dirt or other foreign substances will not be considered defective.

The express warranty above constitutes the only warranty of Refrigerating Specialties products, and is in lieu of all other warranties, expressed or implied, written or oral, including any warranty of merchantability or warranty of fitness for a particular purpose and in no event is Refrigerating Specialties responsible for any consequential damages of any nature whatsoever. No employee, agent, dealer or other person is authorized to give any warranties on behalf of Refrigerating Specialties nor to assume for Refrigerating Specialties any other liability in connection with any of it products.

A4AOT PARTS KITS REFERENCE

		PORT SIZE							
ITEM	DESCRIPTION	3/4"	1"	1-1/4"	1-5/8"	2"	2-1/2"	3"	4"
4 -6	Stem Kit	202121	202121	202121	202121	202121	202121	202121	202121
12 -14, 16	Spring Kit RA / V	202481	202481	202481	202481	202481	202481	202481	202481
	Spring Kit RD	202482	202482	202482	202482	202482	202482	202482	202482
16, 17, 97	Diaphragm Kit	200775	200775	200775	200775	200775	200775	200775	200775
22 -26, 19	Plug Kit, Pilot	200777	200777	200777	200777	200777	200777	200777	200777
17	Plug Pkg, Pipe	202552	202552	202552	202552	202552	202552	202552	202552
19, 28, 29	Adapter Kit	200703	200703	200700	200725	200725	200685	200713	200716
29, 30	Piston Kit	200760	200760	200767	200389	200389	200391	200393	200227
34-37	Spring Kit, Closing	202300	202300	202301	202302	202302	202303	202304	202305
33-37, 40-42	Plug Kit, Full Capacity	202021	202022	202023	202024	202025	202026	202027	202028
	Plug Kit, 50% Capacity	202029	*	NA	NA	NA	NA	NA	NA
	Plug Kit, 35% Capacity	NA	NA	202031	202032	**	202033	202034	202035
	Plug Kit, 17% Capacity	202030	*	NA	NA	NA	NA	NA	NA
37, 38, 40, 41	Bottom Cover Kit	200761	200761	200761	NA	NA	NA	NA	NA
40-42	Packing Kit, Stem	202100	202100	202100	202100	202100	202100	202101	202101
43, 44	Seal Cap Kit	202110	202110	202110	202110	202110	202110	202111	202111
33-38, 40-44	Bottom Kit, Full Capacity	202010	202011	202012	202013	202014	202015	202016	202017
	Bottom Kit, 50% Cap	202347	*	NA	NA	NA	NA	NA	NA
	Bottom Kit, 17% Cap	202346	*	NA	NA	NA	NA	NA	NA
31 (Qty 8)	Bolt Pkg, Adapter	202248	202248	202248	202249	202249	202249	202250	202250
39 (Qty 6)	Bolt Pkg, Bottom Cap	NA	NA	NA	202251	202251	202251	202252	202252
99 (Qty 5)	O-Ring Pkg, Adapter	202485	202485	202485	202485	202485	202485	202485	202485
102 (Qty 5)	O-Ring Pkg	202488	202488	202488	202488	202488	202488	202488	202488
103 - 106	Thermal Element	202088	202088	202088	202088	202088	202088	202088	202088
91 -106, 3 -17	Bon/Adapt Low Temp	202096	202096	202096	202096	202096	202096	202096	202096
	Bon/Adapt Hi-Temp	202099	202099	202099	202099	202099	202099	202099	202099

A4AOT

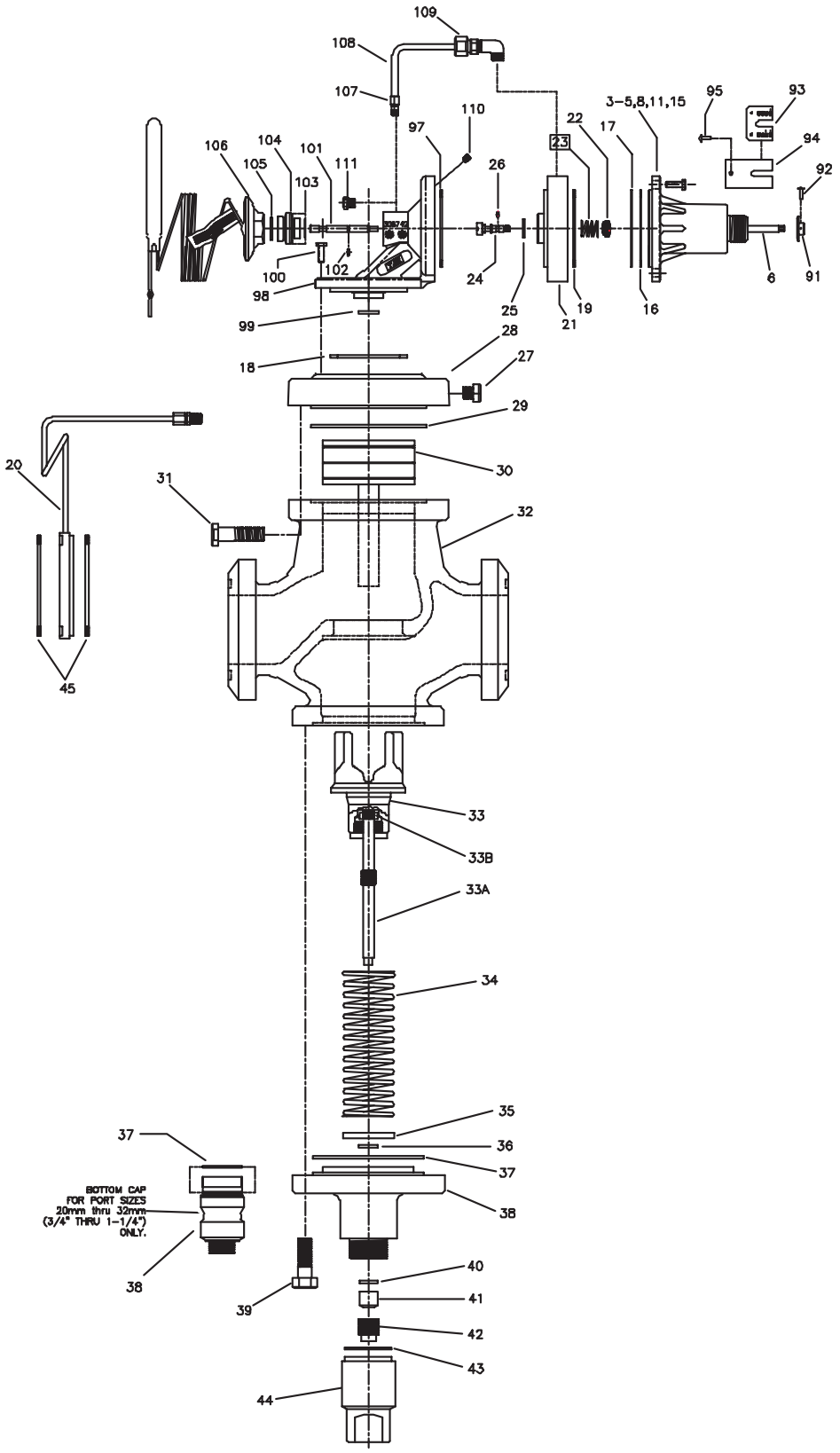

Fig. 4

4	Packing Ring
5	Packing Washer
6	Adjusting Stem
11	Screw, Bonnet
15	Diaphragm Follower
16	Gasket, Bonnet
17	Diaphragm
19	Gasket, Adapter
20	Flg Ring-tube Asm
21	Adapter, A4AO
22	Spring Nut
23	Spring, Pilot Plug
24	Pilot Plug
25	O-Ring Seal
26	O-Ring, Pilot Plug
27	Gauge Port Pipe Plug
28	Adapter, Body
29	Gasket, Body
30	Piston-Stem
31	Screw, Body
32	Body
33	Throttling Plug Asm
34	Spring, Closing
35	Dirt Wiper Retainer
36	Dirt Wiper
37	Seal, Bottom Cap
38	Bottom Cap
39	Screw, Bottom Cap
40	Packing Washer
41	Packing Ring
42	Stuffing Box Nut
43	Gasket, Seal Cap
44	Seal Cap
45	Gasket, Flange
46	Bolt, Flange
47	Nut, Flange
91	Indicator Ring
92	Indicator Screw
93	Indicator Tag
94	Indicator Tag
95	Collar Screw
96	Pilot Seat
97	Gasket
98	Pilot Body
99	O-Ring
100	Cap Screw
101	Push Pin
102	O-Ring
103	O-Ring
104	Thermo-Adapter
105	O-Ring
106	Thermal Element
107	Tube Fitting
108	Tube
109	Tube Fitting
110	Set Screw

A4AT A4AOT VALVE DIMENSION TABLE																			
PORT SIZE		20 & 25 MM 3/4 & 1			32 MM 1-1/4			40 & 50 MM 1-5/8 & 2			65 MM 2-1/2			75 MM 3			100 MM 4		
DIMENSION			MM	INCH		MM	INCH		MM	INCH		MM	INCH		MM	INCH		MM	INCH
A	(ALL)		164	6.2		203	8.0		251	9.9		252	9.9		311	12.2		359	14.1
B	(ALL)		244	9.6		248	9.8		287	11.3		302	11.9		324	12.8		361	14.2
C	(ALL)		378	14.9		396	15.6		450	17.7		470	18.5		582	23.0		665	26.2
D	FPT	3/4	229	9.0	1-1/4	269	10.6	1-1/2	318	12.5	2-1/2	343	13.5	3	401	15.8	4	462	18.2
	PIPE	1	229	9.0	1-1'2	269	10.6	2	318	12.5									
	SIZE	1-1/4	229	9.0															
E	SW	3/4	229	9.0	1-1/4	269	10.6	1-1/2	318	12.5	2-1/2	343	13.5	3	401	15.8	4	462	18.2
	PIPE	1	229	9.0	1-1/2	269	10.6	2	318	12.5									
	SIZE	1-1/4	229	9.0															
F	WN	3/4	267	10.5	1-1/4	312	12.3	1-1/2	376	14.8	2-1/2	414	16.3	3	490	19.3	4	584	23.0
	PIPE	1	274	10.8	1-1/2	318	12.5	2	384	15.1									
	SIZE	1-1/4	274	10.8															
G	ODS	1-1/8	300	11.8	1-3/8	338	13.3	1-5/8	427	16.8	2-5/8	445	17.5	3-1/8	508	20.0	4-1/8	625	24.6
	TUBE	1-3/8	297	11.7	1-5/8	339	13.8	2-1/8	417	16.4	3-1/8	480	18.9	3-5/8	554	21.8			
	SIZE	1-5/8	313	12.3	2-1/8	384	15.1	2-5/8	442	17.4									
H	(ALL)		117	4.6		117	4.6		140	5.5		159	6.2		176	7.0		222	8.8
J	(ALL)		98	3.9		178	7.0		251	9.9		314	12.4		314	12.4		363	14.3

BOLT TORQUE TABLE		
ITEM	PORT SIZE	TORQUE
7/16" Flange Bolt	1/2"	28 ft lb
5/8" Flange Bolt	3/4" - 2"	85 ft lb
3/4" Flange Bolt	2-1/2" - 3"	105 ft lb
7/8" Flange Bolt	4"	150 ft lb
5/16"-18 Bonnet Bolt	3/4" - 4"	11 ft lb
5/16"-18 Adapter Bolt	3/4" - 2"	11 ft lb
5/8"-11 Adapter Bolt	3" - 4"	75 ft lb
Bottom Cap	3/4"- 1-1/4"	150 ft lb
1/2"-13 Bottom Cap Bolt	1-5/8" - 2-1/2"	50 ft lb
5/8"-11 Bottom Cap Bolt	3"-4"	75 ft lb

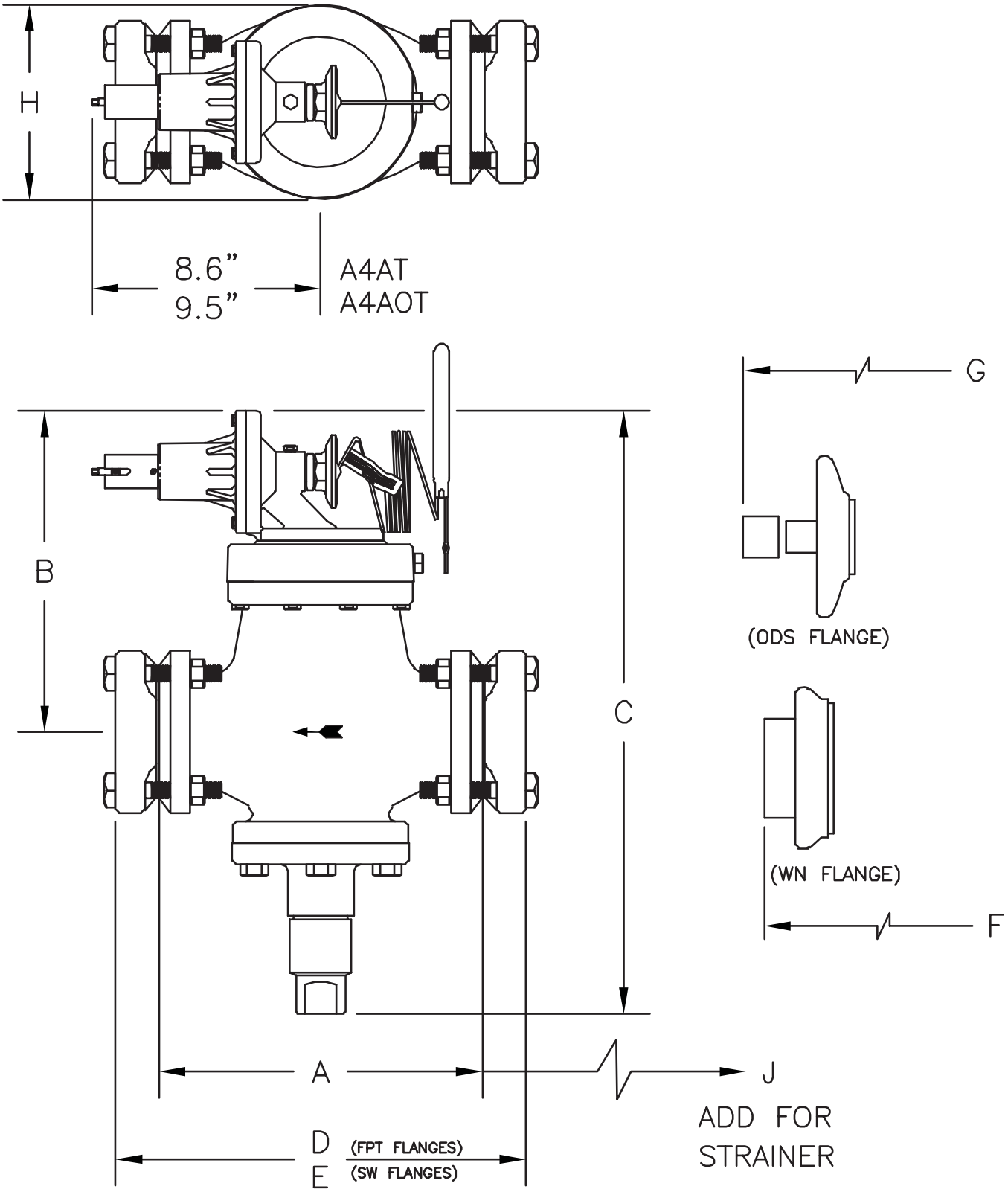
H
8.6”
9.5”
A4AT
A4AOT
G
B
C
(ODS FLANGE)
(WN FLANGE)
F
A
J
ADD FOR
STRAINER
D
E
(FPT FLANGES)
(SW FLANGES)

Fig. 5